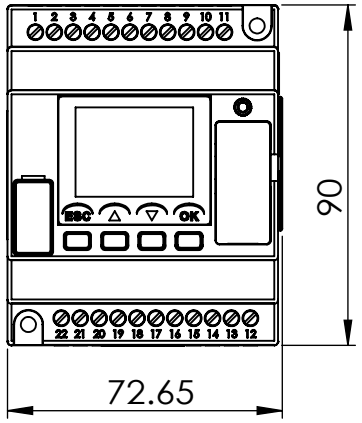

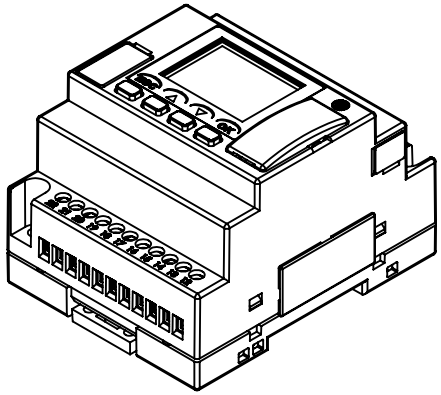

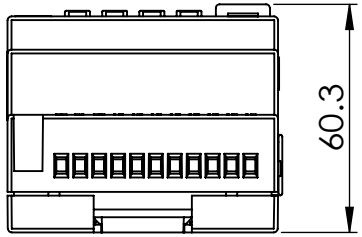

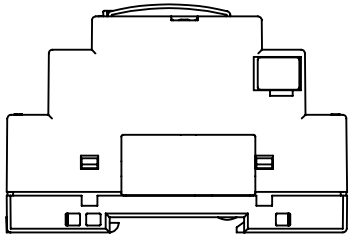

	0~4 mm	5~12 mm	13~36 mm	37~110 mm	110~330 mm	331~999 mm	1000~ mm
1	0.10	0.15	0.20	0.30	0.45	0.70	1.0
2	0.15	0.20	0.30	0.45	0.70	1.0	1.5
3	0.20	0.30	0.45	0.70	1.0	1.5	2.0
4	0.30	0.45	0.70	1.0	1.5	2.0	2.5
5	0.45	0.70	1.0	1.5	2.0	2.5	4.0

No.	Description	Material	Q'ty	Surface	Remark
1	.	PC	.	.	

YOTTA CONTROL Co.,Ltd.

Project :

Title :

A2 Main

Scale	Drawer	Checked	Approved	Date
1:2	DENNIE	.	2013/11/6	

Rev.	Description	Checked	Date
1	.	.	.

Dwg No. Part—000001 Rev. 0

	0~4 mm	5~12 mm	13~36 mm	37~110 mm	110~330 mm	331~999 mm	1000~ mm
1	0.10	0.15	0.20	0.30	0.45	0.70	1.0
2	0.15	0.20	0.30	0.45	0.70	1.0	1.5
3	0.20	0.30	0.45	0.70	1.0	1.5	2.0
4	0.30	0.45	0.70	1.0	1.5	2.0	2.5
5	0.45	0.70	1.0	1.5	2.0	2.5	4.0

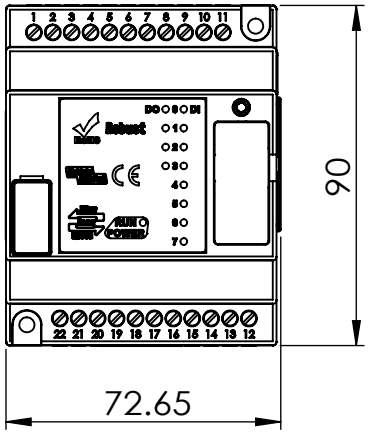

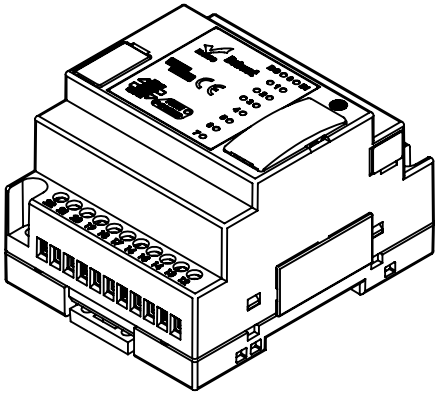

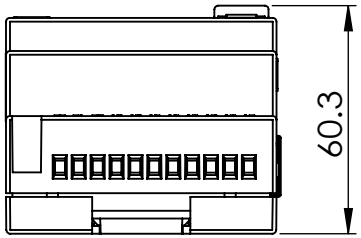

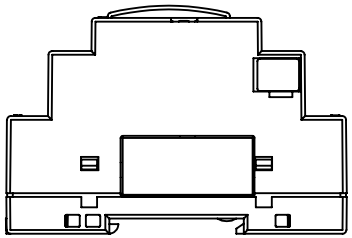

No.	Description	Material	Q'ty	Surface	Remark
1	.	PC	.	.	

YOTTA CONTROL Co.,Ltd.

Project :

Title :

A2 Main-2

Scale	Drawer	Checked	Approved	Date
1:2	DENNIE	.	2013/11/6	

Rev.	Description	Checked	Date
1	.	.	.

Dwg No. Part—000001 Rev. 0

	0~4 mm	5~12 mm	13~36 mm	37~110 mm	110~330 mm	331~999 mm	1000~ mm
1	0.10	0.15	0.20	0.30	0.45	0.70	1.0
2	0.15	0.20	0.30	0.45	0.70	1.0	1.5
3	0.20	0.30	0.45	0.70	1.0	1.5	2.0
4	0.30	0.45	0.70	1.0	1.5	2.0	2.5
5	0.45	0.70	1.0	1.5	2.0	2.5	4.0

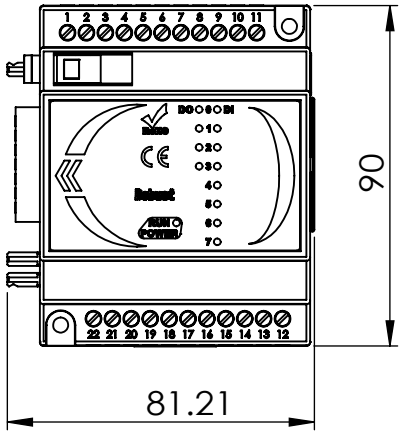

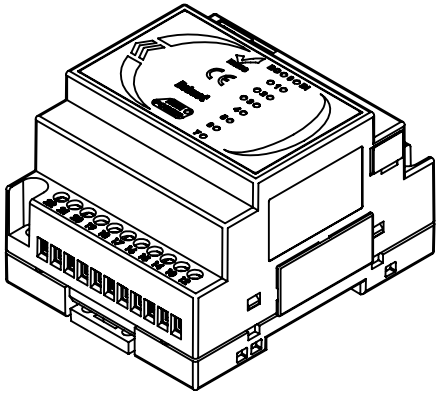

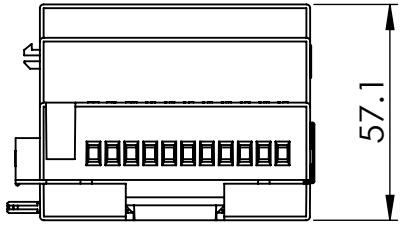

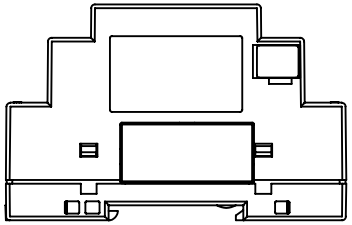

No.	Description	Material	Q'ty	Surface	Remark
1	.	PC	.	.	

YOTTA CONTROL Co.,Ltd.

Project :

Title :

A2 Ext

Scale	Drawer	Checked	Approved	Date
1:2	DENNIE	.	2013/11/6	

Rev.	Description	Checked	Date
1	.	.	.

Dwg No. Part—000001 Rev. 0

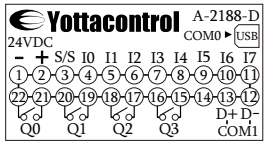
Yottacontrol
A-2188-D
COM0
USB
24VDC
– + S/S I0 I1 I2 I3 I4 I5 I6 I7
1 2 3 4 5 6 7 8 9 10 11
22 21 20 19 18 17 16 15 14 13 12
Q0 Q1 Q2 Q3 D+ D– COM1

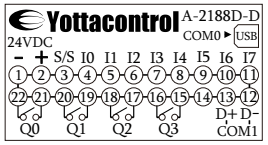
Yottacontrol
A-2188D-D
COM0
USB
24VDC
– + S/S I0 I1 I2 I3 I4 I5 I6 I7
1 2 3 4 5 6 7 8 9 10 11
22 21 20 19 18 17 16 15 14 13 12
Q0 Q1 Q2 Q3 D+ D– COM1

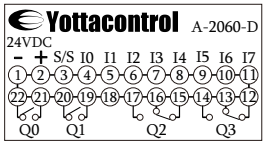
Yottacontrol
A-2060-D
24VDC
– + S/S I0 I1 I2 I3 I4 I5 I6 I7
1 2 3 4 5 6 7 8 9 10 11
22 21 20 19 18 17 16 15 14 13 12
Q0 Q1 Q2 Q3

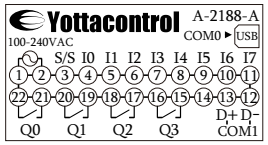
Yottacontrol
A-2188-A
COM0
USB
100-240VAC
S/S I0 I1 I2 I3 I4 I5 I6 I7
1 2 3 4 5 6 7 8 9 10 11
22 21 20 19 18 17 16 15 14 13 12
Q0 Q1 Q2 Q3 D+ D– COM1

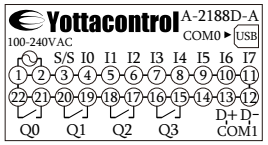
Yottacontrol
A-2188D-A
COM0
USB
100-240VAC
S/S I0 I1 I2 I3 I4 I5 I6 I7
1 2 3 4 5 6 7 8 9 10 11
22 21 20 19 18 17 16 15 14 13 12
Q0 Q1 Q2 Q3 D+ D– COM1

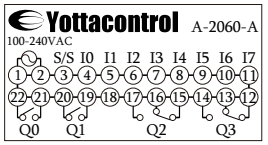
Yottacontrol
A-2060-A
100-240VAC
S/S I0 I1 I2 I3 I4 I5 I6 I7
1 2 3 4 5 6 7 8 9 10 11
22 21 20 19 18 17 16 15 14 13 12
Q0 Q1 Q2 Q3