A-52x Series Distributed Control System

Catalogue • 2016. 10

Android

A-52x Wi-Fi DCS

eAutomation Solution

Yottacontrol Co.

©Yottacontrol 2016

Central Processing Units

Wi-Fi Distributed Control System

A-52x Wi-Fi Series

1

OVERVIEW

- ※ Creation Of Control Programs In Function Block Diagram (FBD) Or Ladder Diagram (LAD)
- ※ 4-Axis Synchronous Motion, 100 KHz PWM (Total 400KHz)
- ※ Able To Edit The Parameter Among The Controller Operation
- ※ Multiple AUTO-PI Synchronous Function
- ※ Multi-Lingual Display Menu
- ※ Enhance Password & Safety Function
- ※ Text Display Can Be Pre-Programmed In Two Languages
- ※ Built-in Standard High Frequency Counter (250KHz Per Input, Total 1000KHz)
- ※ Built-in Standard Real Time Clock (RTC)
- ※ PC Program Can Be Used For All A-61/52/62 Series
- ※ ATP2 Text Panel Can Plug & Play Directly
- ※ Built-in Standard RS-485 Port, Connect More Than 10000 IOs Via Remote IO Module
- ※ Connect Encoder & Multi-Sensors Directly
- ※ Built-in Step Motor Driver, Connect Directly
- ※ Built-in Datalog Function, MicroSD Plug-in
- ※ Display Text Display Diversity Patterns, Scrolling Text, Bar Charts, Indicators ....
- ※ 108 FBD Integrated Functions, 103 LD Integrated Functions
- ※ Astronomical Clock Function
- ※ ATP2 Text Panel Built-in Function Key
- ※ Digital Oscilloscope Function, Real-Time Monitoring
- ※ High-Level Math Functions
- ※ Communication Protocol MODBUS RTU/ASCII & Multi Format
- ※ Block Name Define, Program Comment
- ※ Communication Baud Rate 921600 bps
- ※ Custom Truth Table, Without Logical Analysis
- ※ Multi Communication Parameter Function
- ※ Quick Calculation Of Nonlinear Equations
- ※ Random Generator Hardware
- ※ Free PC Software "Yotta Edit" + "YottaUtility"
- ※ The A-3288 Two-Way Communicate Transmitter, Enhance Message Text Function, Edit Controller Program/Parameter Directly, Stand By Mode
- ※ Free iOS / Android APP "WStation-Pro", Able To Monitor The Controller Status And Control Digital/Analog Inputs Directly
- ※ Able To Connect Wi-Fi AP, Internet Of Things (IOT), Remote Control

For more information, please refer to

www.yotttacontrol.com

- ※ Able To Connect Wi-Fi Range Extender, To Enhance The Wireless Operate Range
- ※ Standard 2.4GHz IEEE 802.11 b/g (Wi-Fi)
- ※ 1 Unit Wi-Fi Controller Base Can Communicate With 7 Units Wi-Fi Devices
- ※ Support Server/Station/Groups/Remote/Slave Mode
- ※ Able To Use For Master Or Slave Application
- ※ Support MODBUS Over TCP/IP, MODBUS Over UDP/IP
- ※ Support WPA2-PSK(AES)
- ※ Able To Set For Wi-Fi To MODBUS 3-port Gateways
- ※ Able To Set For Wi-Fi to MODBUS 3-port Serial Device Servers
- ※ Adjustable Transmission Power
- ※ Built-in Current/Voltage/PT-100 Input + Current Output
- ※ Data Can Be Interchange By Each Controller

Type	5290D	5288D	5288D-T	5289D	5289D-T
Operation Voltage	10~30VDC/24VAC	10~30VDC/24VAC	10~30VDC/24VAC	10~30VDC/24VAC	10~30VDC/24VAC
Inputs	2*DI(Isolation) (low:<2VDC/high:>4VDC) 2*Cirrent(0/4~20mA)+2*PT-100 (Range:-50~+200℃ /Resolution:0.25℃)	8*DI(Isolation) status low:<2VDC status high:>4VDC	8*DI(Isolation) status low:<2VDC status high:>4VDC	4*DI(Isolation) status low:<2VDC status high:>4VDC 4*AI(0~10VDC)	4DI(Isolation) status low:<2VDC status high:>4VDC 4*AI(0~10VDC)
Outputs	2*Isolation(Transistor) 2*AO(0/4~20mA)	4*Isolation(Relay)	4*Isolation(Transistor)	4*Isolation(Relay)	4*Isolation(Transistor)
Continuous Current	Transistor:10~35VDC/200mA AO(0~20mA/4~20mA)	Relay:5A (with resistive load), 2 A (with inductive load) / Transistor:1.75A(OCP/OTP/UVLO)			
Output Operating Frequency	Relay:30HZ / Transistor:100KHZ				
Input Operating Frequency	250KHZ(Total 1000KHZ)				
RTC/ Hold During Power Off	Yes				
Operation Temperature	-20 to +75 °C				
Communication Ports	Wi-Fi*1 & USB*1 & RS-485*1	Wi-Fi*1 & USB*1 & RS-485*2 & RS-232*1			
Communication Baud Rate	1200~921600bps				
Degree Of Protection	IP20				
Base Controller IOs	10 IOs	12 IOs			
Installation	35 mm DIN rail or Flush mounting				
Dimension (W x H x D mm)	76.4*118.2*40.7 mm				
Communication Cable	CAB-MINIUSB60 or RS-485 or RS-232				

*D-x = LCM Type

©Yottacontrol 2016

Two-Way communicate Transmitter

The A-3288/A-3289 Two-Way communicate Transmitter

A-3288/3289

OVERVIEW

- ※ Suitable For the A-52 Series Wi-Fi Controller
- ※ Plug & Play Directly
- ※ Multi-Lingual Display Menu
- ※ Able To Edit The Parameter Among The Controller Operation
- ※ IP66 Protection
- ※ Display Text Display Diversity Patterns, Scrolling Text, Bar Charts, Indicators ....
- ※ Built-in Function Key & Twin Display
- ※ Digital Oscilloscope Function, Real-Time Monitoring
- ※ Support Start-Up Display
- ※ Standard 2.4GHz IEEE 802.11 b/g (Wi-Fi)
- ※ Display Resolution: 96*64 Pixels
- ※ Dual Watchdog Timer
- ※ The Transmitter Able To Edit Controller Program /Parameter Directly Without PC Software
- ※ Support WPA2-PSK(AES)
- ※ Able To Use 7 Units Transmitter To Communicate With 1 Unit Wi-Fi Controller, And Process The Independent Operation Per Transmitter
- ※ Two-Way Communicate System, Can Via The Display To Monitor
- ※ Multi-Channel & Multi-Clustering Can Be Used Simultaneously, No ID groups Limit
- ※ Adjustable Transmission Power

For more information, please refer to
www.yotttacontrol.com

Type	A-3288 (Wi-Fi Two-Way Communicate Transmitter)	A-3289 (Wi-Fi Two-Way Communicate Transmitter)
Operation Voltage	AA Battery *4 / RCR-V3	AA Battery *2
Display	1.8 " STN	---
Contrast	Adjustable directly	---
Resolution	96*64 pixels	---
STN Display Life	More than 50000 hours	---
Brightness	60cd/m2	---
Display Color	Monochrome	---
Function Keys	9, Definable	6
Display Dimension	38*28 mm	---
Operation Temperature	-20 to +75 °C	-20 to +75 °C
Degree Of Protection	IP66	IP66
Communication	Standard 2.4GHz IEEE 802.11 b/g (Wi-Fi)	Standard 2.4GHz IEEE 802.11 b/g (Wi-Fi)
Dimension (W x H x D)	222.1*65.6*45 mm	120*55*25 mm

©Yottacontrol 2016

Text Panel

PLC Text Panel

ATP2

3

OVERVIEW

※ Use For All Yottacontrol A-51/52/61/62 Series
※ Plug & Play
※ Multi-Lingual Display & Setting
※ Able To Edit The Parameter Among The Controller Operation
※ Enhance Password & Safety Function
※ Display Text Display Diversity Patterns, Scroll-in Text, Bar Charts, Indicators ....
※ Built-in Function Key
※ Digital Oscilloscope Function, Real-Time Monitoring
※ Support Start-Up Screen
※ RS-485 Interface
※ Resolution: 192*64 pixels
※ Dual Watchdog Timer
※ Surge, EFT & ESD Protection
※ IP65 Protection

For more information, please refer to
www.yotttacontrol.com

Type	ATP2 (Text Panel)
Operation Voltage	10~30VDC/24VAC
LCM	4.3 " STN
Contrast	Adjustable resistor
Resolution	192*64 pixels
LCM Life	>50000 hr
Brightness	60cd/m2
Color	Monochrome
Function Key	5-KEY
Display Dimension	96*32 mm
Operation Temperature	-10 to +55 °C
Degree Of Protection	IP65(Front Panel)
Installation	35 mm DIN rail or Flush mounting
Dimension (W x H x D mm)	157.9*86.4*28.6 mm

©Yottacontrol 2016

Remote Modules

I/O Remote Modules

A-10x Series

OVERVIEW

- ※ Use For Yottacontrol Whole Series Controller
- ※ RS-485 Interface
- ※ Supports Modbus RTU / ASCII
- ※ LED Indicator
- ※ Operation Temperature -20~+75°C
- ※ Isolation Voltage: 5000 V DC
- ※ Surge , EFT And ESD Protection
- ※ Dual Watchdog Timer
- ※ Low Power Indicator
- ※ Operation Range: Up To 1200 Meters
- ※ Free Monitor PC Software "YottaUtility"

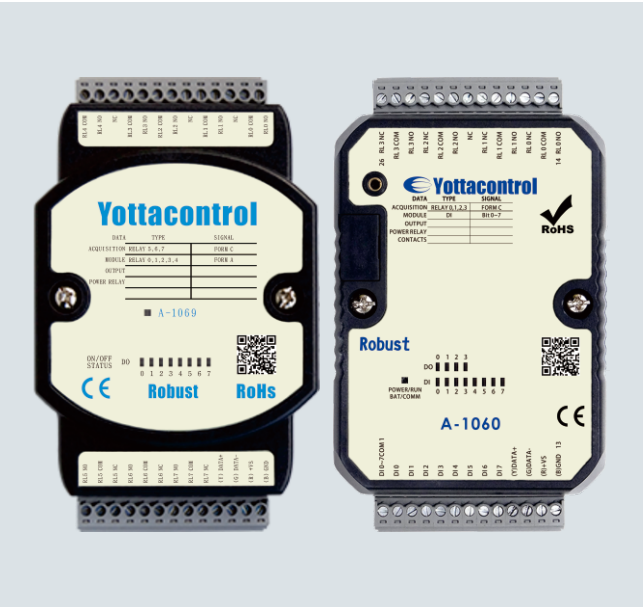

For more information, please refer to

www.yotttacontrol.com

Type	A-1057 DO	A-1058 DO	A-1068 DO	A-1069 DO	A-1051 DI	A-1055 DIO
Operation Voltage	10~30VDC/24VAC	10~30VDC/24VAC	10~30VDC/24VAC	10~30VDC/24VAC	10~30VDC/24VAC	10~30VDC/24VAC
Inputs	---	---	---	---	16*Isolation DI status low:<1VDC status high:>5~30VDC	8*Isolation DI status low:<1VDC status high:>5~30VDC
Outputs	12 (Souce Transistor)	12 (Sink Transistor)	8 (Signal Relay)	8 (Power Relay)	---	8 (Sink Transistor)
Continuous Current	10-35VDC(1A)	10-40VDC(200mA)	120VAC(0.5A)/30VDC(1A)	250VAC(5A)/30VDC(1A)	---	10-40VDC(200mA)
Communication Baud Rate			1200~115200bps			
Isolation			YES(5000VDC)			
Input Operating Frequency			10HZ			
Output Operating Frequency			Relay:10HZ / Transistor:10HZ			
Operation Temperature			-20 to +75 °C			
Degree Of Protection			IP20			
Installation			35 mm DIN rail or Flush mounting			
Dimension (W x H x D mm)			76.4*118.2*38.5 mm			

Type	A-1055S DIO	A-1060 DIO
Operation Voltage	10~30VDC/24VAC	10~30VDC/24VAC
Inputs	8*Isolation DI status low:<1VDC status high:>5~30VDC	8*Isolation DI status low:<1VDC status high:>5~30VDC
Outputs	8 (Souce Transistor)	4 (Power Relay)
Continuous Current	10-35VDC(1A)	250VAC(5A)/30VDC(5A)
Communication Baud Rate		1200~115200bps
Isolation		YES(5000VDC)
Input Operating Frequency		10HZ
Output Operating Frequency		Relay:10HZ / Transistor:10HZ
Operation Temperature		-20 to +75 °C
Degree Of Protection		IP20
Installation		35 mm DIN rail or Flush mounting
Dimension (W x H x D mm)		76.4*118.2*38.5 mm

©Yottacontrol 2016

Remote Modules

Analog I/O Remote Modules

A-10x Series

OVERVIEW

- ※ Analog Input 16-bit Resolution
- ※ Analog Output 12-bit Resolution
- ※ Support Analog Input/Output 0/4 ~20mA Or 0~10V
- ※ Support PT-100 Or PT-1000 (2/3/4-wired)
- ※ Support J,K,T,E,R,S,B Thermocouple
- ※ Support 10K/6.8K/4.7K/3.3K/3K/2.7K/2.252K/2.1K/2K/1.5K/1K Thermistor
- ※ Burn-out Detection
- ※ RS-485 Interface + USB Interface
- ※ Hi-Speed RS-485 Interface (Max 921600bps)
- ※ Supports Modbus RTU / ASCII
- ※ LED Indicator
- ※ Operation Temperature -20~+75°C
- ※ Isolation Voltage: 5000 V DC
- ※ Surge , EFT And ESD Protection
- ※ Dual Watchdog Timer
- ※ Low Power Indicator
- ※ Operation Range: Up To 1200 Meters
- ※ Free PC Software "YottaUtility"

For more information, please refer to

www.yotttacontrol.com

Type	A-1010 ADIO	A-1012 ADIO	A-1019 ADIO
Operation Voltage	10~30VDC/24VAC	10~30VDC/24VAC	10~30VDC/24VAC
Inputs	---	2*Isolation DI status low:<1VDC status high:>5~30VDC	4*Isolation DI status low:<1VDC status high:>5~30VDC
Outputs	4*(Transistor)	2*(Transistor)	---
Continuous Current	10-40VDC(200mA)	10-35VDC(1A)	---
Communication Baud Rate			2400~921600bps
Isolation			YES(5000VDC)
Input Operating Frequency			10HZ
Output Operating Frequency			Transistor:10HZ
Operation Temperature			-20 to +75 °C
Degree Of Protection			IP20
Installation			35 mm DIN rail or Flush mounting
Dimension (W x H x D mm)			76.4*118.2*38.5 mm
Analog Inputs	8 (10-bit)	4 (16-bit)	8 (16-bit)
Analog Input Type	0~10V	2* 0/4~20mA 2* PT-100/1000 (-200 ~ +600°C)	0/4~20mA,J,K,T,E,R ,S,B,Thermistor (-270 ~ +1800°C)
Analog Outputs	2 (10-bit)	2 (12-bit)	---
Analog Output Type	0~10V	0/4 ~20mA	---
Input Impedance	Voltage:10 MΩ	Current: 100 Ω RTD : 10 MΩ	Current: 100 Ω Voltage : 10 MΩ
AnalogInput / Output Accuracy	±1% / ±1%	±0.1% / ±1%	±0.1% / ---
Interface	RS-485		RS-485 + USB
Channel Independent Configuration			YES
Sampling Rate			10 sample/second (total)
CMR @ 50/60 Hz			120 dB
Span Drift			±50 ppm/°C
Zero Drift			±18 μV/°C
Temperature Ranges	(PT-100:-200~600°C) (PT-1000:-200~600°C) (J:-210~760°C) (K:-270~1370°C) (T:-270~400°C) (E:-270~1000°C) (R:0~1750°C) (S:0~1750°C) (B:0~1800°C) (Thermistor-10K-T2:0~100°C) (Thermistor-10K-T3:0~100°C) (Thermistor-6.8K:-10~100°C) (Thermistor-4.7K:-10~100°C) (Thermistor-3.3K:-20~100°C) (Thermistor-3K:-20~100°C) (Thermistor-2.7K:-20~100°C) (Thermistor-2.252K:-20~100°C) (Thermistor-2.1K:-30~100°C) (Thermistor-2K:-30~100°C) (Thermistor-1.5K:-40~100°C) (Thermistor-1K:-40~100°C)		

©Yottacontrol 2016

Accessories

OVERVIEW

※ ASPS Use For 24VDC
※ AMB128 Use For A-11x/A-21x/A-51x/A-61x Series
※ AMB128 Can Upload & Download Directly
※ AMB128 Has Copy & Password Protection
※ Standard Micro-SD-8GB
※ Micro-SD File Format *.CSV

For more information, please refer to
www.yotttacontrol.com

Type	ASPS 48W Power Supply	AMB128 Program Memory Cards	CAB-MINIUSB60 Communication lines	Micro-SD-8GB Data Storage Card
Operation Voltage	1-phase 100/240 V AC	USB/PLC	USB	PLC
PC Driver	---	Windows98/ME/2000/XP/Vista/7/8/ Server 2008/WinCE/Linux/MacDC	Windows98/ME/2000/XP/Vista/7/8/ Server 2008/WinCE	— *.CSV
Support Models	A-1x/A-2x/A-3x/A-5x /A-6x/A-7x/TS/TC	A-11x/A-21x/A-51x/A-61x	A-51x/A-52x/A-53x	Micro-SD Type
Operation Temperature	-10 to +55 °C	-10 to +55 °C	-20 to +75 °C	-10 to +55 °C
Degree Of Protection	IP20	IP20	IP20	---
Installation	35 mm DIN rail or Flush mounting	PC or PLC	PC or PLC	PC or PLC
Dimension(W x H x D)	73*90*60.3 mm	25.7*39.7*16.8 mm	60cm	---
Input Frequncey	50 / 60 Hz	---	---	---
Fuse	YES	---	---	---
OCP	YES	---	---	---
OTP	YES	---	---	---
24VDC(MAX)	2.0A	---	---	---
Output Voltage Stability	-+8%	---	---	---
Ripple	100mV	---	---	---
Efficiency	>75%	---	---	---
Power LED	YES	---	---	---

©Yottacontrol 2016

Software

PLC Edit Software

YottaEditor

7

OVERVIEW

- ※ Creation Of Control Programs In Function Block Diagram (FBD) Or Ladder Diagram (LAD)
- ※ Use For All Yottacontrol A-11/21/51/52/61 Series
- ※ Support Windows98/ME/2000/XP/Vista/7/8/10
- ※ Offline Simulation Can Edit Parameters
- ※ Online Simulation Can Monitor Parameters
- ※ Message Text Can Edit Multi-Lingual
- ※ Built-in Datalog Function, Use Standard MicroSD
- ※ Display Text Display Diversity Patterns, Scrollin Text, Bar Charts, Indicators ....
- ※ 108 FBD Integrated Functions, 103 LD Integrated Functions
- ※ Astronomical Clock Function
- ※ ATP2 Text Panel Built-in Function Key
- ※ Digital Oscilloscope Function, Real-Time Monitoring
- ※ High-Level Math Functions
- ※ Communicate Protocol MODBUS RTU/ASCII & Multi Format
- ※ Block Name Define, Program Comment
- ※ Custom Truth Table, Without Logical Analysis
- ※ Ladder Diagram Can Compile To Function Block Diagram

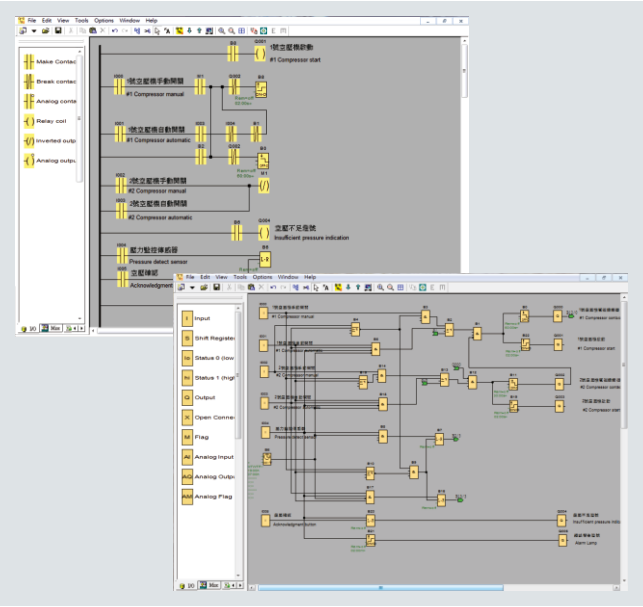

For more information, please refer to
www.yotttacontrol.com

FBD Function

AND	&	Input	I	PI controller	A->	NOT Mask	1 MASK	Square root	SQRT
AND	↑&	Function Key	F	PWM	∿->	NAND Mask	& MASK	Absolute value	ABS
NAND	&	Sift Register Bit	S	Analog Filter	Ax	NOR Mask	≥1 MASK	GCD	GCD
NAND	↓&	Status 0 (low)	lo	MaxMin	Ax	XOR Mask	=1 MASK	LCM	LCM
OR	≥1	Status 1 (high)	hi	Average Value	Ax	Data array Max/Min/Avg	AXIV	2 ' s nth power	POW2
NOR	≥1	Output	Q	Latching Relay	L-R	Data Max/Min/Avg	DXIV	e ' s nth power	EXP
XOR	=1	Open Connector	X	Pulse Relay	P-R	RAND	Rand	Fixed-point arithmetic	FIX
NOT	1	Flag	M	Message Texts	Text	MEM	MEM	Round-off	round
On-Delay	ON-D	Analog Inut	AI	Shift Register	>>	Encoder	ENC	Sine function	SIN
Off-Delay	OFF-D	Analog Output	AQ	Mathematical instruction error detection	E->	Stepping Motor Control	SMC	Cosine function	COS
On-/Off-Delay	ON/OFF	Analog Flag	AM	Modbus Read	MR	Stepping Motor Control(Edge)	SMCE	Tangent function	TAN
Retentive On-Delay	R-ON-D	Up/Down Counter	U/D	Modbus Write	MW	Pulse train output	PTO	Cotangent function	COT
Wiping Relay (pulse output)	W-R	Hours Counter	H-C	Boolean function	BOOL	Pulse train output (Edge)	PTOE	Secant function	SEC
Edge Triggered Wiping Relay	ETWR	Threshold Trigger		Trigger date time	TDT	Segment display	SEG	Cosecant function	CSC
Asynchronous Pulse Generator	A-P-G	Mathematical instruction	A->	Binary-Coded Decimal	BCD	Word to Bit	WTB	Quadratic equation	QUAD
Random Generator	R-G	Analog Comparator	ΔA	Binary Code	BIN	UDC Communication	UDC	Data Log	L
Stairway Lighting Switch	S-L-S	Analog Threshold Trigger	/A	Left Rotation	ROL	CRC16	CRC	WiFi Digital Read	I
Multiple Function Switch	M-F-S	Analog Amplifier	A->	Right Rotation	ROR	Odd Number	ODD	WiFi Digital Write	Q
Weekly Timer	W-T	Analog Watchdog		Left Shift	SHL	Even Number	EVEN	WiFi Analog Read	AI
Yearly Timer	Y-T	Analog Differential Trigger	Δ	Right Shift	SHR	Modulo	MOD	WiFi Analog Write	AQ
Astronomical clock	AC	Analog MUX	A->	AND Mask	& MASK	Remainder	REM		
StopWatch	SW	Analog Ramp	A->	OR Mask	≥1 MASK	Logarithm	LOG		

©Yottacontrol 2016

Software

PLC Edit Soft

YottaEditor

OVERVIEW

※ Program Comment
※ Project-Oriented Application Development
※ Ladder Diagram & Function Block Diagram Editing Comparison Function
※ Program Memory Code Auxiliary Display
※ Component Comment

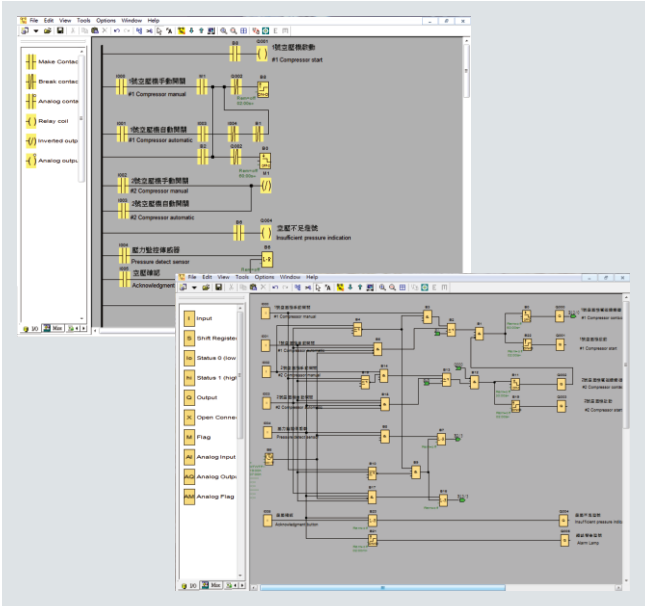

For more information, please refer to
www.yotttacontrol.com

LD Function	Make Contact		Threshold Trigger		Modbus Write	MW	Pulse train output	PTO	Cotangent function	COT
	Break Contact		Mathematical instruction		Boolean function	BOOL	Pulse train output (Edge)	PTOE	Secant function	SEC
	Analog Contact		Analog Comparator		Trigger date time	TDT	Segment display	SEG	Cosecant function	CSC
	Relay Coil		Analog Threshold Trigger		Binary-Coded Decimal	BCD	Word to Bit	WTB	Quadratic equation	QUAD
	Inverted Output		Analog Amplifier		Binary Code	BIN	UDC Communication	UDC	Data Log	L
	Analog Output		Analog Watchdog		Left Rotation	ROL	CRC16	CRC	Serial connect with an A contact	YES
	On-Delay	ON-D	Analog Differential Trigger		Right Rotation	ROR	Odd Number	ODD	Parallel connect with an A contact	YES
	Off-Delay	OFF-D	Analog MUX		Left Shift	SHL	Even Number	EVEN	Concatenate two blocks in series	YES
	On-/Off-Delay	ON/OFF	Analog Ramp		Right Shift	SHR	Modulo	MOD	Merge two blocks in paralle	YES
	Retentive On-Delay	R-O-W-D	PI controller		AND Mask	& MASK	Remainder	REM	WiFi Digital Read	I
	Wiping Relay (pulse output)	W-R	PWM		OR Mask	≥1 MASK	Logarithm	LOG	WiFi Digital Write	Q
	Edge Triggered Wiping Relay	ETWR	Analog Filter		NOT Mask	1 MASK	Square root	SQRT	WiFi Analog Read	AI
	Asynchronous Pulse Generator	A-P-G	MaxMin		NAND Mask	& MASK	Absolute value	ABS	WiFi Analog Write	AQ
	Random Generator	R-G	Average Value		NOR Mask	≥1 MASK	GCD	GCD		
	Stairway Lighting Switch	S-L-S	AND		XOR Mask	=1 MASK	LCM	LCM		
	Multiple Function Switch	M-F-S	NAND		Data array Max/Min/Avg	AXIV	2 ' s nth power	POW2		
	Weekly Timer	W-T	Latching Relay		Data Max/Min/Avg	DXIV	e ' s nth power	EXP		
	Yearly Timer	Y-T	Pulse Relay		RAND	Rand	Fixed-point arithmetic	FIX		
	Astronomical clock	AC	Message Texts		MEM	MEM	Round-off	round		
	StopWatch	SW	Shift Register		Encoder	ENC	Sine function	SIN		
	Up/Down Counter	U/D	Mathematical instruction error detection		Stepping Motor Control	SMC	Cosine function	COS		
	Hours Counter	H-C	Modbus Read		Stepping Motor Control(Edge)	SMCE	Tangent function	TAN		

©Yottacontrol 2016

Monitoring and Database Software

DCS Monitoring and Database Software

YottaUtility

9

OVERVIEW

※ Monitor & Database Function
※ Use For Yottacontrol Whole Series Controller And TS-48 Time Switch
※ Windows98/ME/2000/XP/Vista/7/8/10
※ Quick Setup Distributed Device Parameter & Monitoring
※ Can Monitor DCS Program & Parameters
※ Can Monitor PLC Program & Parameters
※ Monitor & Database Can Use For SCADA
※ Real-Time Monitoring, Warning Setup
※ Monitor Hundreds Controllers & Distributed Devices
※ Component Name Comment
※ Easy Logical Program Function
※ Time Switch Series Edit
※ Multi Communicate Parameter Function
※ Support MODBUS TCP-IP/UDP-IP/RTU/ASCII
※ Quick Setup Controller RTC Parameter

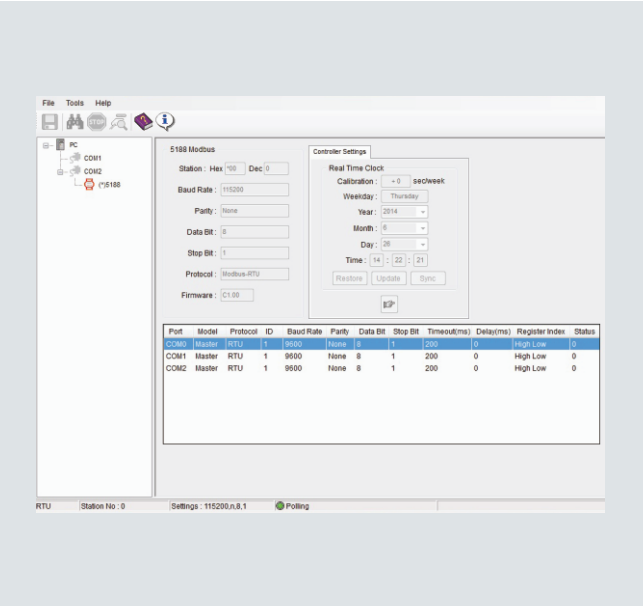

For more information, please refer to
www.yotttacontrol.com

APPLICATIONS

ELECTRONIC EQUIPMENT

- SORTING MACHINE
- LOADER & UNLOADER
- PACKAGING MACHINE
- DETACTOR
- CUTTING MACHINE
- LAMINATOR
- COATING MACHINE
- LAPPING MACHINE
- FEEDING SYSTEM
- PRECISION MACHINERY

ELECTROMECHANICAL EQUIPMENT

- SPRAYING MACHINE
- EVAPORATION
- MACERATOR
- CALENDER MACHINE
- FLUSHING MACHINE
- ELECTROPLATING MACHINE
- WELDING MACHINE
- PRESS MACHINE
- CUTTING MACHINE
- BENDING MACHINE
- BOBBIN MACHINE
- BURN-IN EQUIPMENT
- DIE CASTER
- HEATING PROCESSING

FOOD & BEVERAGE

- PACKAGING MACHINE
- SEAL-CAPPING MACHINE
- LABELLING MACHINE
- FORMING MACHINE
- BLENDER EQUIPMENT
- CASING MACHINE
- FILLING MACHINE
- DRYER EQUIPMENT
- WEIGHT SEPARATOR
- CAPPING MACHINE
- INJECTION MACHINE
- TEMPERATURE-CONTROLL

©Yottacontrol 2016

Ordering Information

Yottacontrol A-52x

CPU		Order No.
5288D	Wi-Fi Display CPU，LCM，DC Power Supply，8DI/4DO，RELAY Output，Wi-Fi*1，RS-232*1，RS-485*2，USB2.0*1	A-5288D
5288D-T	Wi-Fi Display CPU，LCM，DC Power Supply，8DI/4DO，Ttansistors Output，Wi-Fi*1，RS-232*1，RS-485*2，USB2.0*1	A-5288D-T
5289D	Wi-Fi Display CPU，LCM，DC Power Supply，4DI/4AI/4DO，RELAY Output，Wi-Fi*1，RS-232*1，RS-485*2，USB2.0*1	A-5289D
5289D-T	Wi-Fi Display CPU，LCM，DC Power Supply，4DI/4AI/4DO，Ttansistors Output，Wi-Fi*1，RS-232*1，RS-485*2，USB2.0*1	A-5289D-T
5290D	ADIO Remote Modules，LED indicator，DC Power Supply，4AI(0~20/4~20mA + PT-100/1000)，2AO(0~20/4~20mA)，2DI，2DO(Source Output)，RS-485*1,USB*1	A-5290D
WIFI Two-Way communicate Transmitter		
3288	Wi-Fi Two-Way communicate Transmitter ，1.8 " STN LCM, 4*AA Battery ，9DI	A-3288
3289	Wi-Fi Two-Way communicate Transmitter ，2*AA Battery ，6DI	A-3289
Remote Modules		
1057	DO Remote Modules，LED indicator，DC Power Supply，12DO，Source Output，RS-485*1	A-1057
1058	DO Remote Modules，LED indicator，DC Power Supply，12DO，Sink Output，RS-485*1	A-1058
1068	DO Remote Modules，LED indicator，DC Power Supply，8DO，Signal Relay Output，RS-485*1	A-1068
1069	DO Remote Modules，LED indicator，DC Power Supply，8DO，Power Relay Output，RS-485*1	A-1069
1051	DI Remote Modules，LED indicator，DC Power Supply，16DI，RS-485*1	A-1051
1055	DIO Remote Modules，LED indicator，DC Power Supply，8DI/8DO，Sink Output，RS-485*1	A-1055
1055S	DIO Remote Modules，LED indicator，DC Power Supply，8DI/8DO，Source Output，RS-485*1	A-1055S
1060	DIO Remote Modules，LED indicator，DC Power Supply，8DI/4DO，Power Relay Output，RS-485*1	A-1060
3016	Radio DIO Remote Modules，LED indicator，DC Power Supply，6DI/7DO，Sink Output，RS-485*1	A-3016
1010	ADIO Remote Modules，LED indicator，DC Power Supply，8AI(0~10V)，2AO(0~10V)，4DO(Sink Output)，RS-485*1	A-1010
1012	ADIO Remote Modules，LED indicator，DC Power Supply，4AI(0~20/4~20mA + PT-100/1000)，2AO(0~20/4~20mA)，2DI，2DO(Source Output)，RS-485*1,USB*1	A-1012
1019	ADIO Remote Modules，LED indicator，DC Power Supply，8AI(0~20/4~20mA,J,K,T,E,R,S,B,Thermistor)，4DI，RS-485*1,USB*1	A-1019
Text Panel		
ATP2	4.3 " STN LCM, DC Power Supply，RS-485*1	ATP2
Accessories		
ASPS	Power Supply，24V/2A	ASPS
CAB-MINIUSB60	Communication lines	CAB-MINIUSB60
AMB128	Program Memory Cards	AMB128
Micro-SD-8GB	Data Storage Card	Micro-SD-8GB
Software		
YottaEditor	Edit Software	YottaEditor
YottaUtility	Monitoring and Database Software	YottaUtility
WStation-Pro	iOS / Android App / Windows App	APP-WStation-Pro
CAB-MINIUSB60 Driver	CAB-MINIUSB60 PC Driver	DR-CAB-MINIUSB60

©Yottacontrol 2016

Wiring Diagrams & Pin Out

DCS & Remote Modules

A-52x Series

11

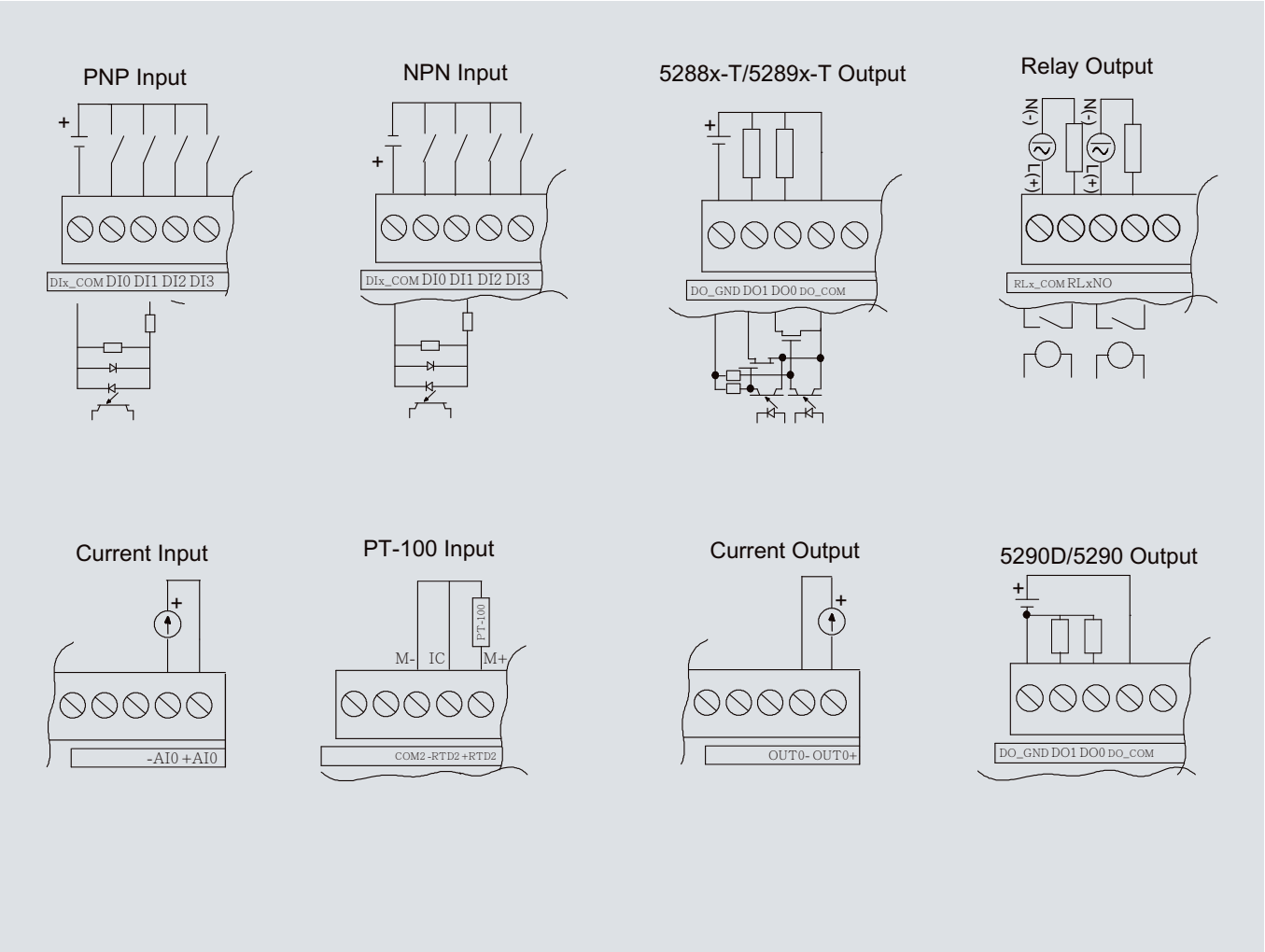

For more information, please refer to
www.yotttacontrol.com

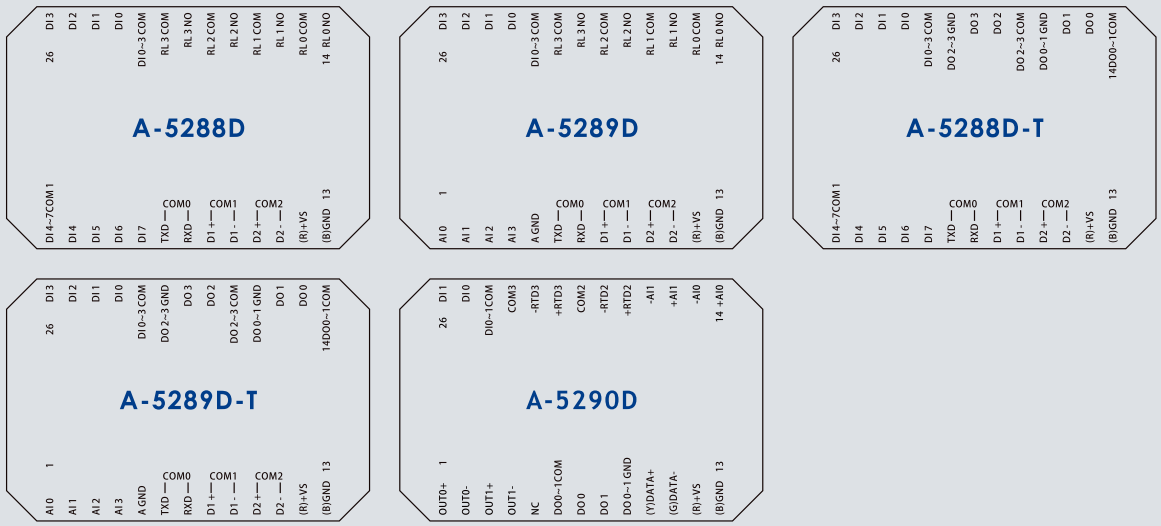

©Yottacontrol 2016

Dimension

DCS & Remote Modules

DCS

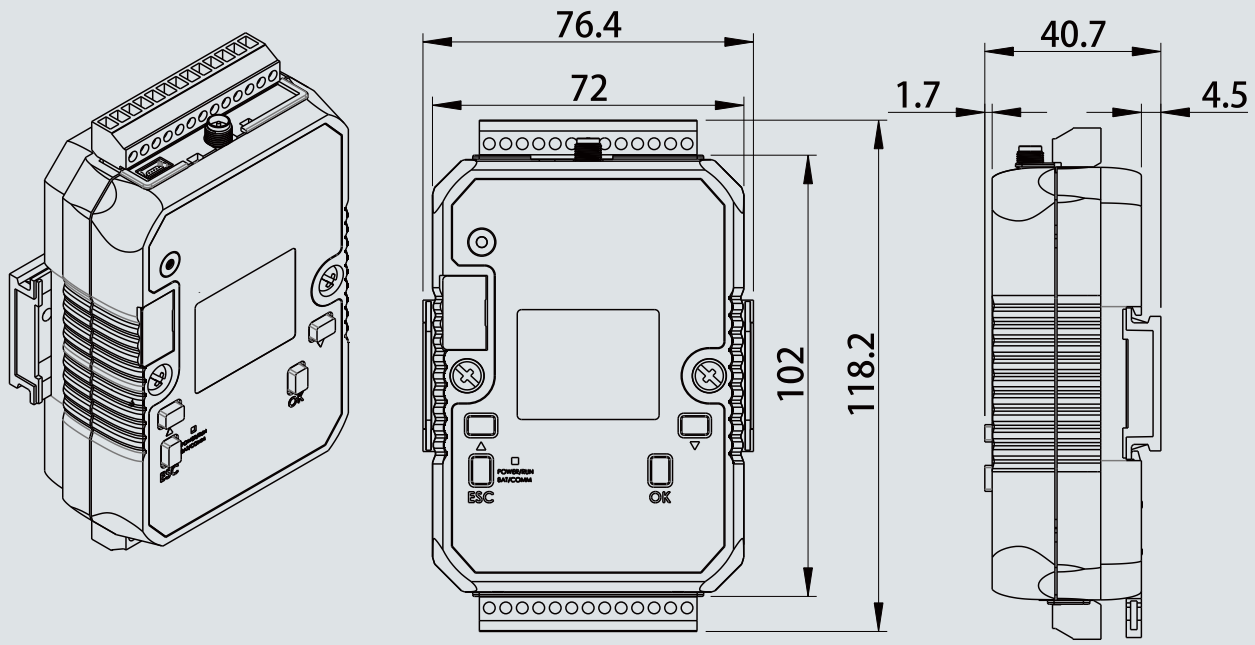

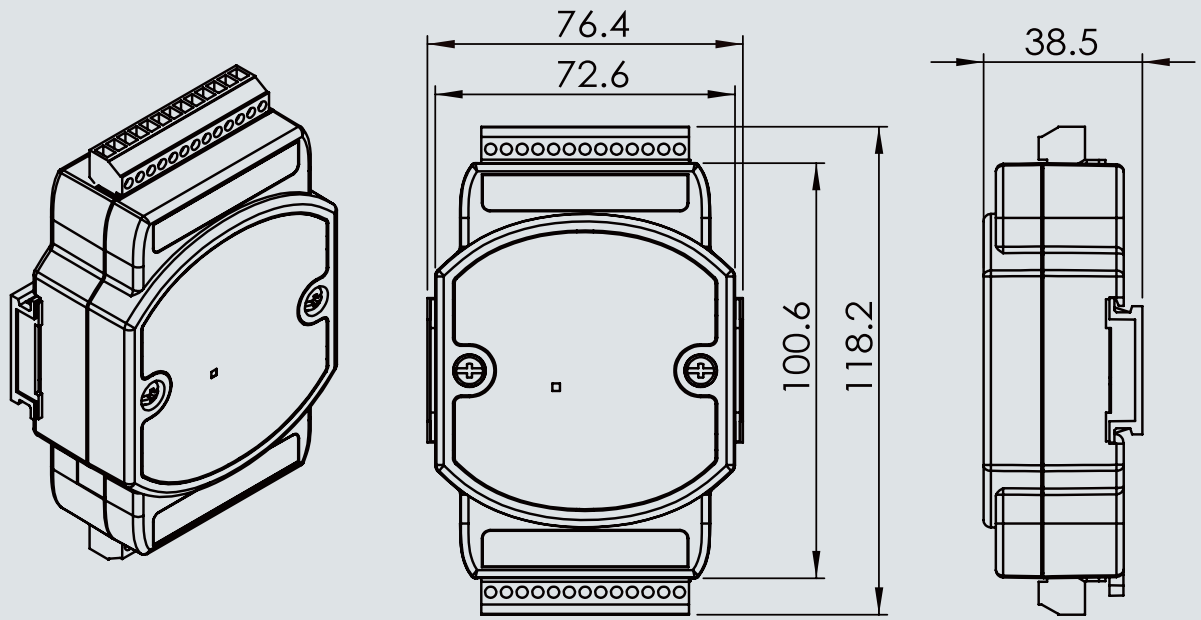

©Yottacontrol 2016

Dimension

DCS & Remote Modules

DCS

13

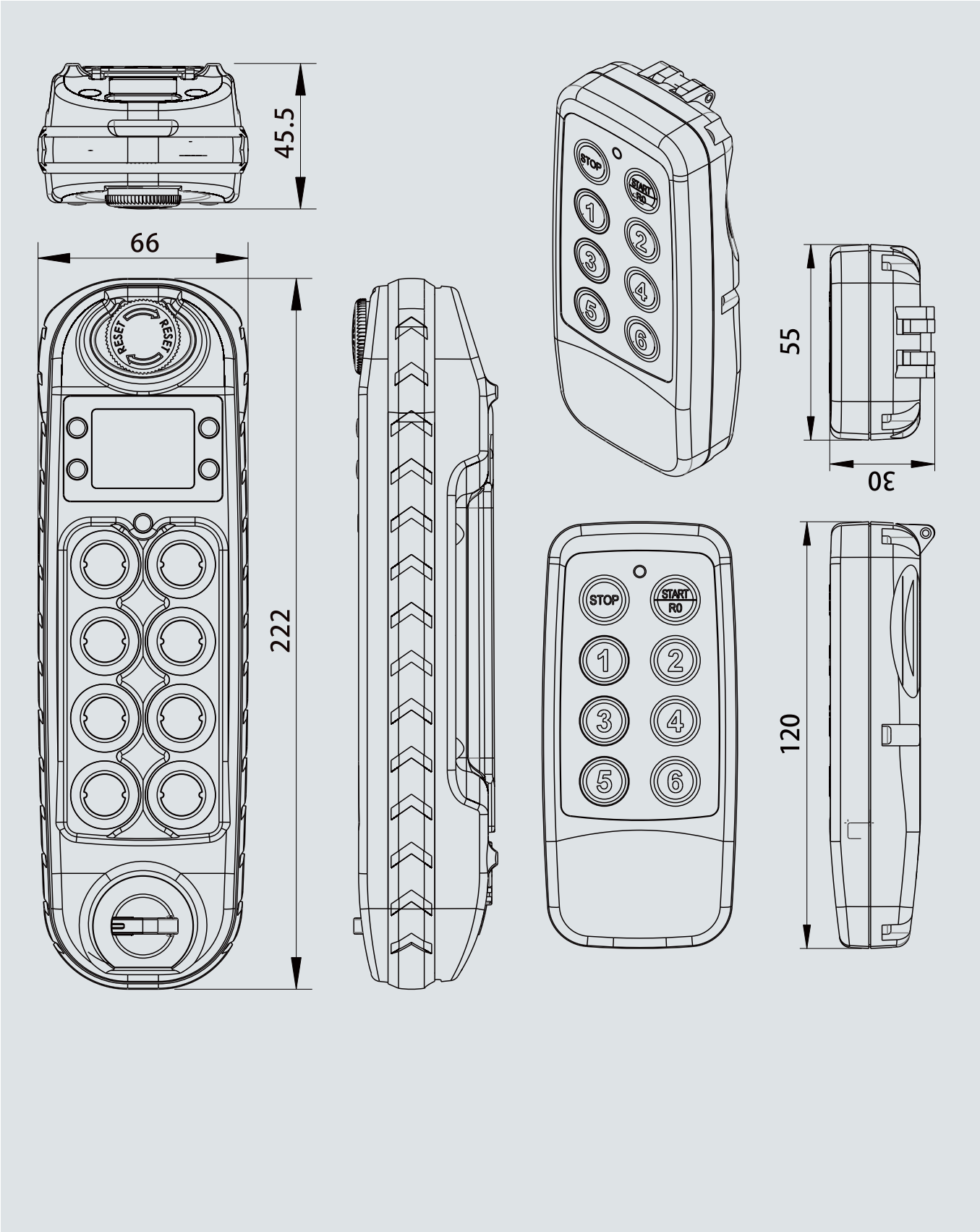

©Yottacontrol 2016

Dimension

DCS & Remote Modules

DCS

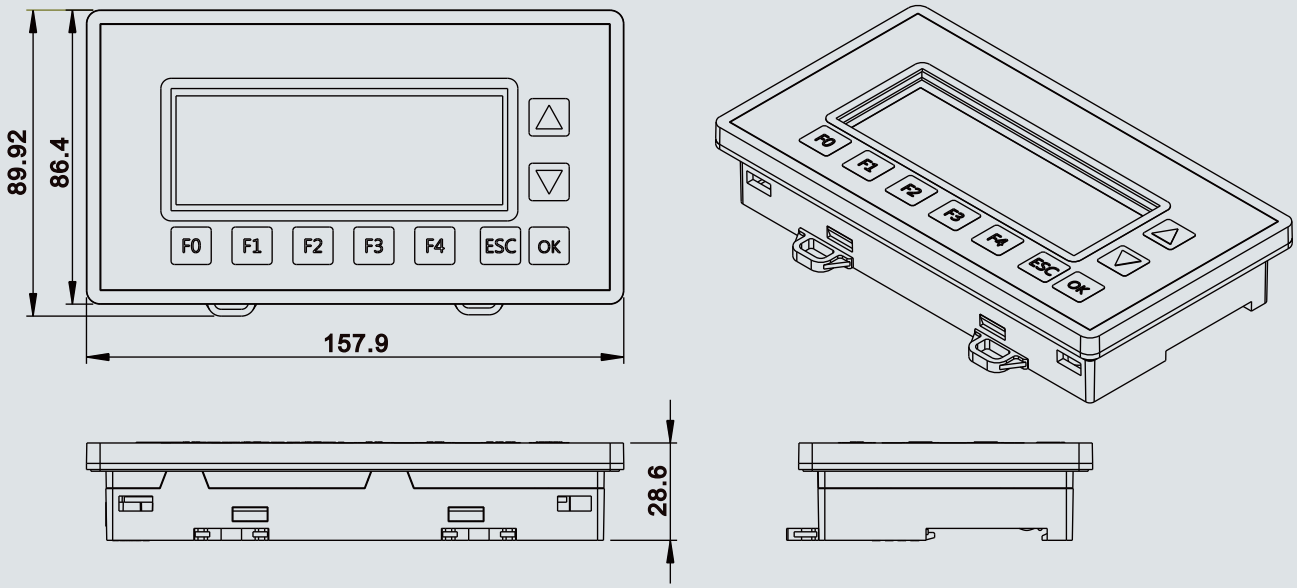

©Yottacontrol 2016

Yottacontrol CO.
www.yottacontrol.com
service@yottacontrol.com